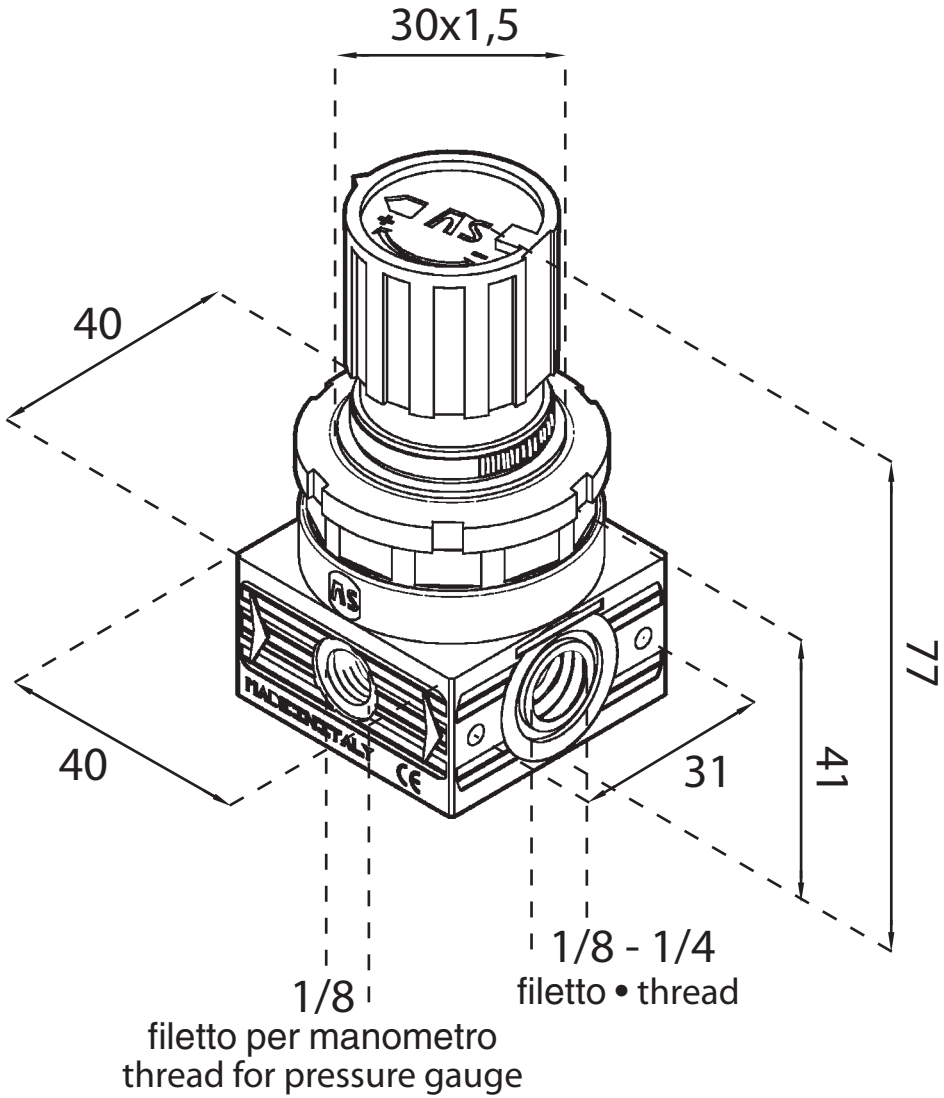
30x1,5
40
40
31
41
77
1/8
filetto per manometro
thread for pressure gauge
1/8 - 1/4
filetto • thread